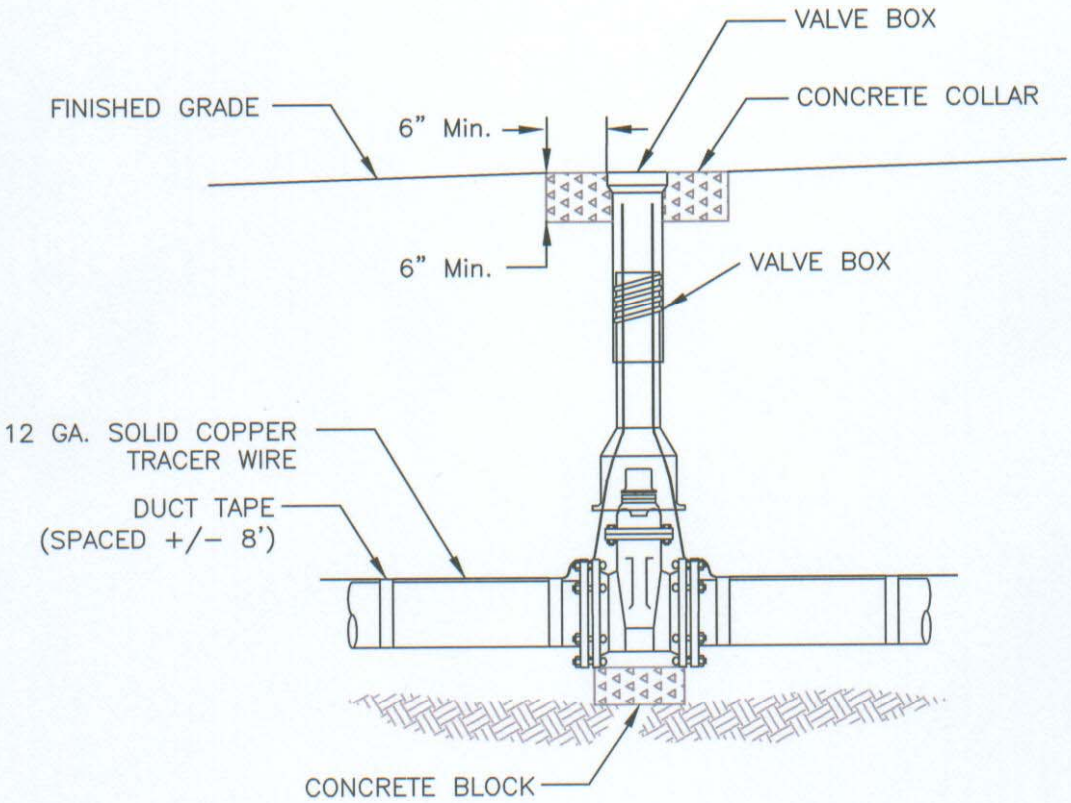

NOTES:

BLOCKING SHALL BE SOLID BLOCK OR CONCRETE.

TRACER WIRE SHALL BE 12 GAGE, SOLID COPPER WITH A MINIMUM OF 2 FEET EXTENDED THROUGH TOP OF RISER PIPE VALVE BOX.

TRACER WIRE SHALL BE TAPED TO THE TOP OF THE PIPE.

CONCRETE COLLARS, 18"X6" SHALL BE PROVIDED FOR ALL VALVE BOXES.

ALL BLOCKING SHALL BE AGAINST UNDISTURBED EARTH.

BACKFILL AND COMPACTION SHALL BE IN ACCORDANCE WITH STANDARD G-6 OR AS DIRECTED BY THE ENGINEER.

VALVE BOX SHALL BE SCREW TYPE ADJUSTABLE ONLY.

VALVE SHALL HAVE MECHANICAL JOINTS AND OPEN COUNTER CLOCKWISE.

	APPROVED	REVISIONS		ST. MARY'S COUNTY METROPOLITAN COMMISSION
		DATE	INITIALS	STANDARDS FOR PUBLIC WATER, SEWER AND INCIDENTAL STRUCTURES
St. Mary's County Metropolitan Commission Since 1964 Potable Water Distribution Wastewater Treatment	C. I. FREDERICK JR., P.E. CHIEF ENGINEER	6/18/09	J.E.C.	IN-LINE WATER VALVE SETTING
	DATE: 7/1/09			STANDARD NO. W-2